MPPT Charge Controller - LED Driver Reference Design

Sr	Revision	Date	Designer	Description
01	1.0	24-JULY-09	SRINIVAS	INITIAL CREATION
02	1.0	04-AUG-09	SRINIVAS	-Made CR601 as Load. -Added a Zener Dioded BAT-54V across GD2 and GD3 to ground. -Connected R702 between gate of MOSFET Q700 and GND. Similarly connected R703 between gate of MOSFET Q701 and GND. -Updated C701 as Electrolytic 22uF,50V -Changed Part Numbers for the following components L701->DRA127-100-R L700->DRA127-4R7-R R705->CSRN 1 0.1 1%R R706->CSRN 1 0.01 1% R SW600 AND SW601-> EVQ-QXS03W -Connected a 10nF,16V capacitor between pin5 of U600 and GND. Updated C500 to 4.7uF/25V and C501 to 2.2uF/50V
03	1.0	10-AUG-09	SRINIVAS	-Made Q402A, R408, R422 as NL. -Changed part number of CR408 to MBR2045CT from Fairchild Semiconductors. Added a heat sink U401 (p/n 274-2AB) to the same diode. -Changed R410, R400 to 470k, 1%. -Changed R411, R401 to 100k, 1%. -Removed C400, C401, C402. -Changed part number CR400, CR403 to MBRB1535CTPBF from Vishay Semiconductors. -Made the part number of C403 the same as C404, 0.1uF, 16V. -Changed R601, R602 to 47k. -Added an SMD test point TP600 and TP601 to pin 37 and pin 38 of U600. -Added a 2x1 jumper between pin 7 of U600 and R621. -Added a 2x1 jumper between pin 56 of U600 and R607. -Added a 2x1 jumper between pin 5 of U600 and C605. -Added a 4 pin male header and added the following signals to it: P0_7, P1_5, P1_4(pin 56 of U600) and FN0_2 (pin 47 of U600) -Changed part number of R700 to that of R706 i.e 0.01 ohms 1%, 1W. -Added 4.7uF, 25V ceramic capacitors between VBatt and Gnd. One in the LED-Buck driver section and one in the LED-Boost driver section. Total of 2 capacitors. -Made C700 as NL. -Changed diode D701 and D700 part numbers to MBRB1050-E3/81 from Vishay Semiconductors. -Removed the E- Pad pin 9 from U500
04	1.0	13-AUG-09	SRINIVAS	-Added a 30V zener in parallel to CR400 with reference CR410. -Added a 20V zener in parallel to CR403 with reference CR411. -Added a note for near Q403 -Changed part number of Q403 to SUD45P03-10. -Added 0.1uF,50V cap at Iin_CSP and BAT_CSP nets and made them as NL. -Added note for J400 and J401. -Made R502, R503, JP500 and JP501 as NL. -Made all OCD components as NL. -Removed L500 and L501. Retain Vcc_5 net and GND symbols. -Corrected the ground symbols on page 6. -Removed CR601, CR602, CR603. -Removed JP602, JP603, JP604. -Removed J600. -Removed CR700, CR701, R708, R710. -Added notes on page 7 for R701 and R704.
05	1.0	21-AUG-09	SRINIVAS	-Added the Logic Table for the Jumpers JP600 and JP601 -Removed R601, R602. -Removed C601, C602, C603, C604, C610. Retained Vcc_5 net at pins 18, 29, 44. -Connected 1uF/16V capacitor at pin 29. and also to the pin 44 and Connected power ground to them. -Connected 0.1uF/16V capacitor at pin 18. Connected digital ground to it -Removed TP600 and TP601. -Changed part number and update value of R700 to CSRN 1 0.02 1% I. -Changed part number of U600 to CY8CLED04D01-56LTXI
06	1.0	25-AUG-09	SRINIVAS	-Addes a resistor divider circuit in parallel to C701. Marked the common node of the divider circuit as BOOST_OVP -Removed the net P1_7 -Connected BOOST_OVP net to pin 48 of U600.
07	1.0	03-SEP-09	SRINIVAS	- Interchanged the Pin 2 and pin 5 connections of U600
08	1.0	27-OCT-09	SRINIVAS	- Updated R705 to 0.2 Ohm

DRN BY	
DATE	07/24/2009
CHKD BY	
DATE	SNVN
APPD BY	
DATE	BKLL/KDG

PROPRIETARY INFORMATION
NO DISSEMINATION OR USE
ALLOWED WITHOUT PRIOR
WRITTEN PERMISSION

CYPRESS SEMICONDUCTOR
#30/5, 1st Cross Street,
R A Puram, Chennai-600 028

Title: MPPT Charge Controller - LED Driver Reference Design

Size	Document Number	Rev
A	COVER PAGE	1.0

Date: October 27, 2009 Sheet 1 of 7

PAGE NO	TITLE
01	COVER PAGE
02	TITLE BLOCK
03	BLOCK DIAGRAM
04	POWER TRAIN CIRCUIT
05	POWER SUPPLY AND INTERCONNECT
06	CY8CLED04D01-56LTXI-PowerPSoC
07	LED DRIVER CIRCUIT

CYPRESS SEMICONDUCTOR

Title: MPPT Charge Controller - LED Driver Reference Design

Size: A | Document Number: TITLE BLOCK | Rev: 1.0

Date: October 27, 2009 | Sheet 2 of 7

BLOCK DIAGRAM

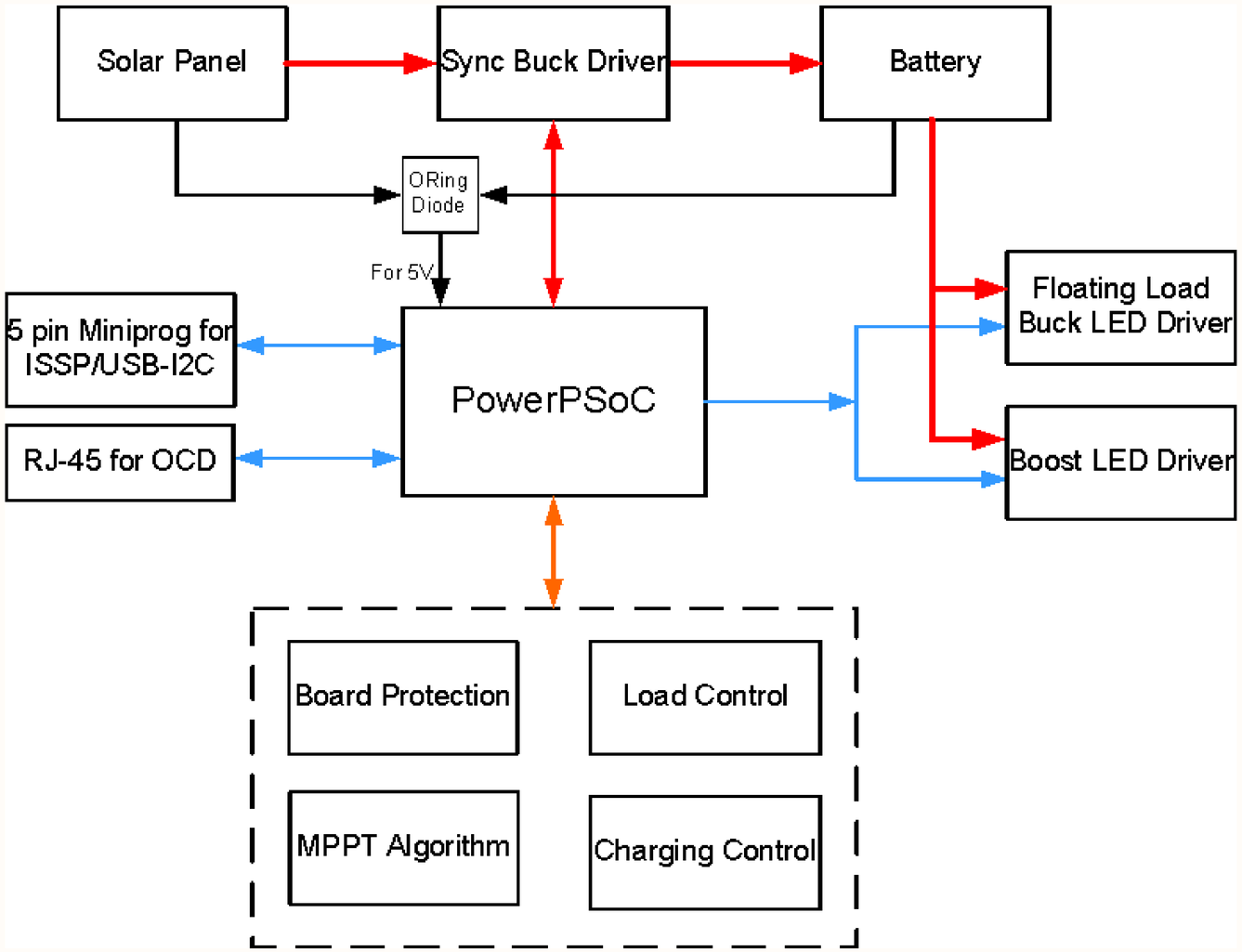

CYPRESS SEMICONDUCTOR		
Title: MPPT Charge Controller - LED Driver Reference Design		
Size: A	Document Number: BLOCK DIAGRAM	Rev: 1.0
Date: October 27, 2009	Sheet 3 of 7	

POWER TRAIN CIRCUITRY

PV_IN(+)
F400
0225007.HXUP
L400
MSS1260-103ML
Iin_CSP
Iin_CSN
R402
CSRN 1 0.025 1% I
R406
CSRN 1 0.025 1% I
R419
2.2K
TO PV PANEL
J400
1714955
NEGATIVE TERMINAL
GROUNDING ONLY
LED401
LN81RPH
CR404
ES1A-TP
CR409
1SMB5936BT3G
CR400
MBRB1535CTPBF
RV400
V47ZA7P
R400
470K
Vin_Sense
R401
100K
C404
0.1uF_16V
C411
0.1uF_50V_NL
C405
1000uF/35V
C410
0.1uF_50V
C406
1000uF/35V
C407
1000uF/35V
Q400
PB039N04L
R412
10E
R403
10K
CR406
BAT54-V
R417
0
UGATE
PHASE
R415
100_NL
C408
100pF/50V_NL
Q401
PB039N04L
R413
10E
R404
10K
CR407
BAT54-V
R420
0
LGATE
NOTE:
FET Q403 IS PROVIDED AS AN OPTION TO IMPROVE EFFICIENCY.
TEMP_SENSE
J404
CON3
Vcc_5
Vtemp
R414
10K
CR408
MBR2045CT
Q403
SUD45P03-10-E3_NL
R421
12K_NL
VBATT
F401
0225010.HXUP
R418
2.2K
R410
470K
TO BATTERY
J401
1714955
NEGATIVE TERMINAL
GROUNDING ONLY
LED402
LN81RPH
CR405
ES1A-TP
VBatt_Sense
C403
0.1uF_16V
R411
100K
CR410
1SMB5932BT3G
CR403
MBRB1535CTPBF
ENABLE
R422
0R_NL
Q402A
Si1016X
R408
10K_NL
Si1016X_NL
C409
0.1uF_50V_NL
BAT_CSP
BAT_CSN
R405
CSRN 1 0.025 1% I
R407
CSRN 1 0.025 1% I
L401
SER2817H-223KL
C412
0.1uF_50V_NL
Q402B
Si1016X
Si1016X_NL
Heat sink for the Rectifier CR408
U400
374-2AB
FUSE HOLDER FOR FUSE F400
U402
02540101Z
FUSE HOLDER FOR FUSE F401
U403
02540101Z

CYPRESS SEMICONDUCTOR			
Title: MPPT Charge Controller - LED Driver Reference Design			
Size: A	Document Number: POWER TRAIN CIRCUITRY		Rev: 1.0
Date: October 27, 2009	Sheet 4 of 7		

GATE DRIVER, EXTERNAL Vcc & INTERCONNECT CIRCUIT

HIGH-FREQUENCY 4A SINK SYNCHRONOUS MOSFET DRIVERS

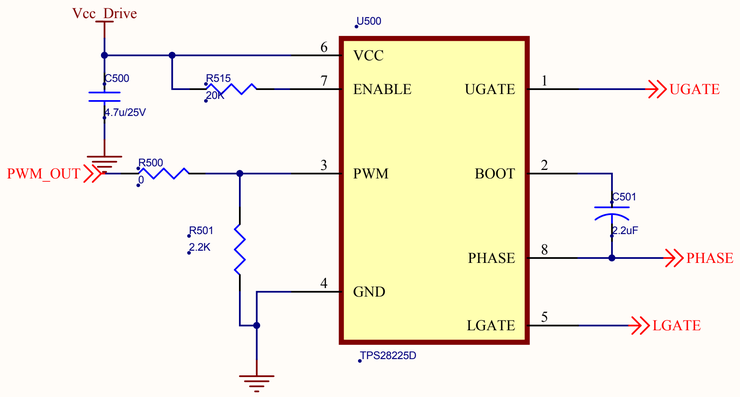

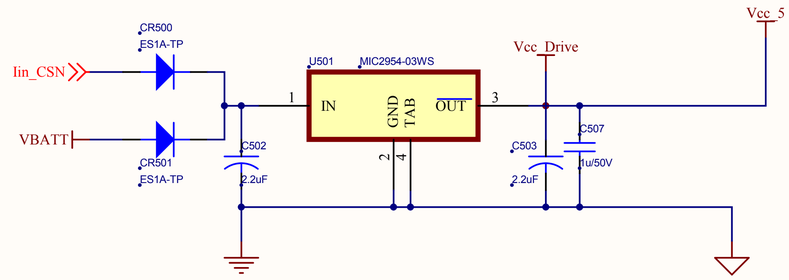

ISSP CONNECTOR

OCD CONNECTOR

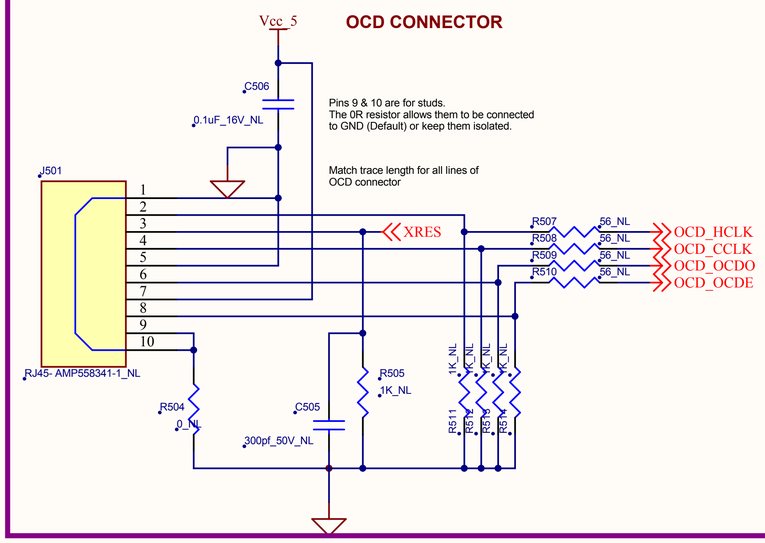

MOUNTING HOLES

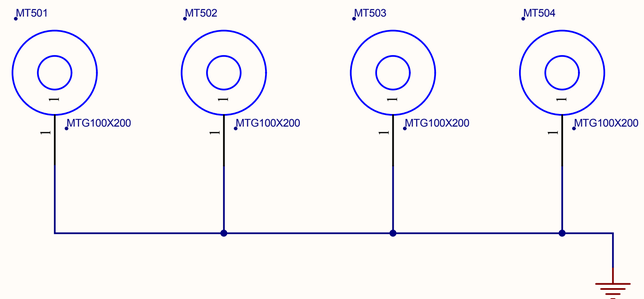

CYPRESS SEMICONDUCTOR		
Title: MPPT Charge Controller - LED Driver Reference Design		
Size: A	Document Number: GATE DRIVER, EXTERNAL Vcc & INTERCONNECT CIRCUIT	Rev: 1.0
Date: October 27, 2009	Sheet 5 of 7	

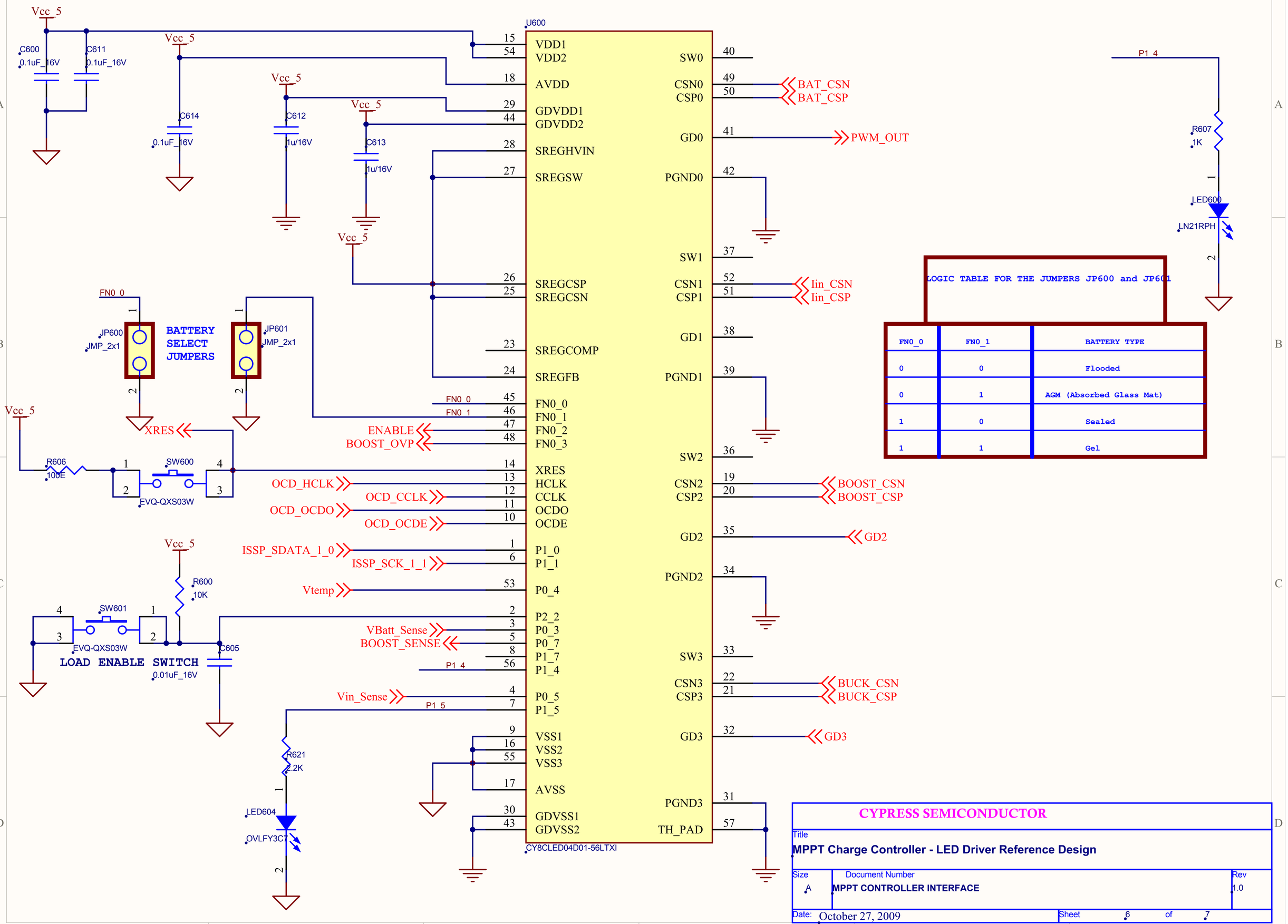
U600
CY8CLED04D01-56LTXI
VDD1
VDD2
AVDD
GDVDD1
GDVDD2
SREGHVIN
SREGSW
SREGCSP
SREGCSN
SREGCOMP
SREGFB
FN0_0
FN0_1
FN0_2
FN0_3
XRES
HCLK
CCLK
OCDO
OCDE
P1_0
P1_1
P0_4
P2_2
P0_3
P0_7
P1_7
P1_4
P0_5
P1_5
VSS1
VSS2
VSS3
AVSS
GDVSS1
GDVSS2
SW0
CSN0
CSP0
GD0
PGND0
SW1
CSN1
CSP1
GD1
PGND1
SW2
CSN2
CSP2
GD2
PGND2
SW3
CSN3
CSP3
GD3
PGND3
TH_PAD
Vcc_5
C600
0.1uF_16V
C611
0.1uF_16V
C614
0.1uF_16V
C612
1u/16V
C613
1u/16V
BAT_CSN
BAT_CSP
PWM_OUT
Iin_CSN
Iin_CSP
BOOST_CSN
BOOST_CSP
GD2
BUCK_CSN
BUCK_CSP
GD3
P1_4
R607
1K
LED600
LN21RPH
FN0_0
JP600
JMP_2x1
BATTERY
SELECT
JUMPERS
JP601
JMP_2x1
XRES
ENABLE
BOOST_OVP
R606
100E
SW600
EVQ-QXS03W
OCD_HCLK
OCD_CCLK
OCD_OCDO
OCD_OCDE
ISSP_SDATA_1_0
ISSP_SCK_1_1
Vtemp
VBatt_Sense
BOOST_SENSE
Vin_Sense
P1_5
R600
10K
SW601
EVQ-QXS03W
LOAD ENABLE SWITCH
C605
0.01uF_16V
R621
2.2K
LED604
OVLFY3C7
LOGIC TABLE FOR THE JUMPERS JP600 and JP601
FN0_0 | FN0_1 | BATTERY TYPE
0 | 0 | Flooded
0 | 1 | AGM (Absorbed Glass Mat)
1 | 0 | Sealed
1 | 1 | Gel
CYPRESS SEMICONDUCTOR
Title
MPPT Charge Controller - LED Driver Reference Design
Size
A
Document Number
MPPT CONTROLLER INTERFACE
Rev
1.0
Date:
October 27, 2009
Sheet
6
of
7

LED DRIVER CIRCUIT

LED-BUCK DRIVER

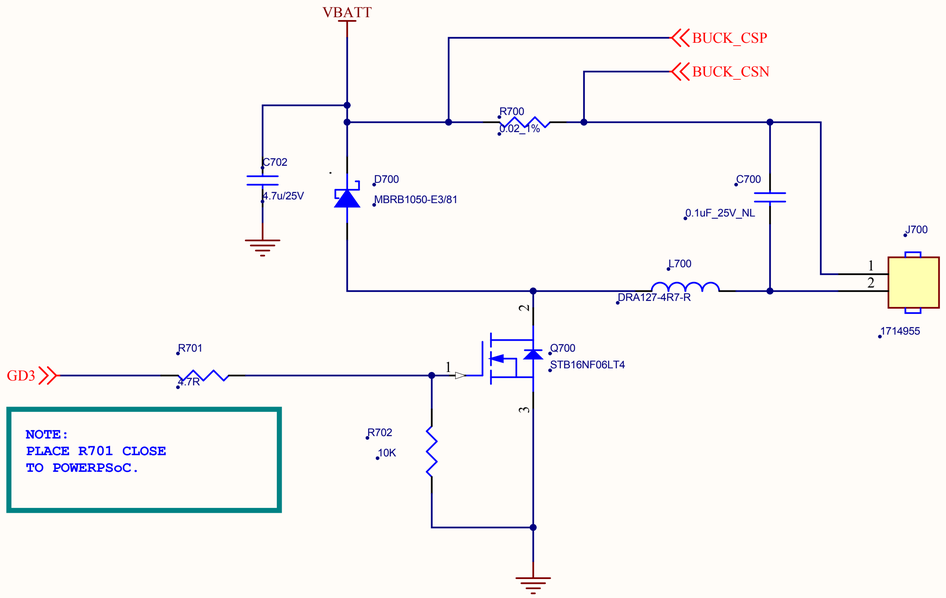

LED-BOOST DRIVER

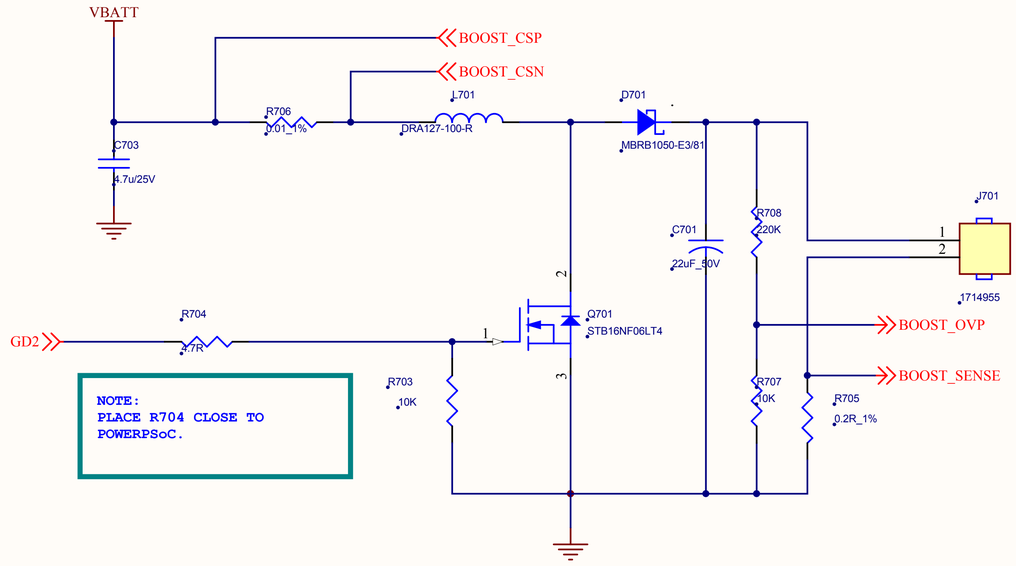

CYPRESS SEMICONDUCTOR

Title: MPPT Charge Controller - LED Driver Reference Design		
Size: A	Document Number: LED DRIVER CIRCUIT	Rev: 1.0
Date: October 27, 2009	Sheet 7 of 7	